ESTIC

ESTIC ROBOT SYSTEM

ERS series

SCARA

https://youtu.be/iGZw4vC5fwI

New Robot System Proposed by ESTIC

General Screw Tightening Robot

PLC controls the nutrunner and the robot

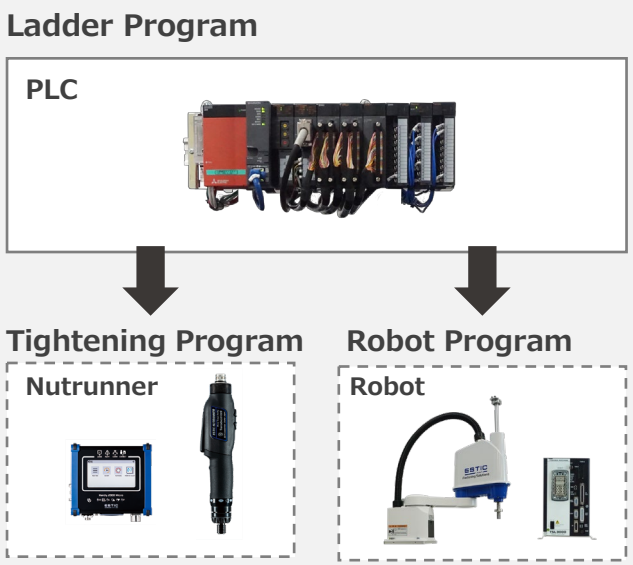

PLC, nutrrunners and the robot require separate configurations, programming, and software maintenance.

Cycle delay occurs due to the communication

ESTIC ROBOT SYSTEM

Nutrunner controls the robot

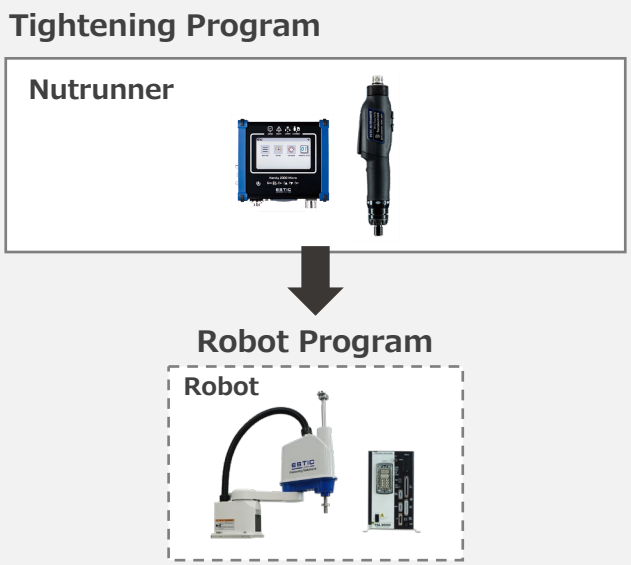

Only the nutrunner programming is required since the system can be managed centrally.

Reduces cycle time

© ESTIC CORPORATION

Significant Reduction of Robot Construction Man-hours

Process of the General Screw Tightening Robot

- Robot Selection
- Nutrunner Selection
- Parts Feeder Selection
- Concept
- Design
- Ladder Programming
- Maintenance Management of PLC Software
- Tightening Programming
- Maintenance Management of Tightening Software
- Robot Programming
- Maintenance Management of Robot Software

・Does the robot correspond to the reaction force of screw tightening ?
・Is the speed sufficient ?
・Is a magnetic or pneumatic screw feeder used ?
・What about parts supply ?

There are many things to be considered

Process of the ESTIC ROBOT SYSTEM

- Robot Selection
- Nutrunner Selection
- Parts Feeder Selection
- Concept
- Design
- Ladder Programming
- Maintenance Management of PLC Software
- Tightening Programming
- Maintenance Management of Tightening Software
- Robot Programming
- Maintenance Management of Robot Software

System and Nutrunner Selection

Only this !

Significantly reduces the number of steps

© ESTIC CORPORATION

Features and Benefits

Direct teaching → Simple settings

Tightening points can be taught by moving the robot directly.

Vision position correction function (optional) → Improves productivity

With the correction function of the camera, even the slightest misalignments will not be missed.

Hole misalignment correction function.

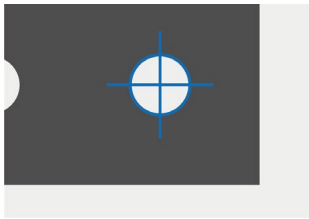

Master image

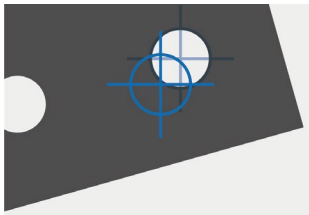

Operating image

Correct position of each tightening points.

© ESTIC CORPORATION

Features and Benefits

Z-axis Thrust Control Function

Production Guarantee

Prevents workpiece overload and cam out by tightening screws or bolts with the appropriate thrust.

Dedicated Command

Reduces Cycle Time

Reduces communication time with the robot by using dedicated commands.

Management Software

Batch Setting

Robot operations such as screw/bolt receivings and tightenings can be set in a batch on the nutrunner side.

Step Function

Detailed settings can be made by selecting an item from

- Tightening
- Move
- Return to the original position
- Skip

© ESTIC CORPORATION

Basic Configuration Robot Model THE400

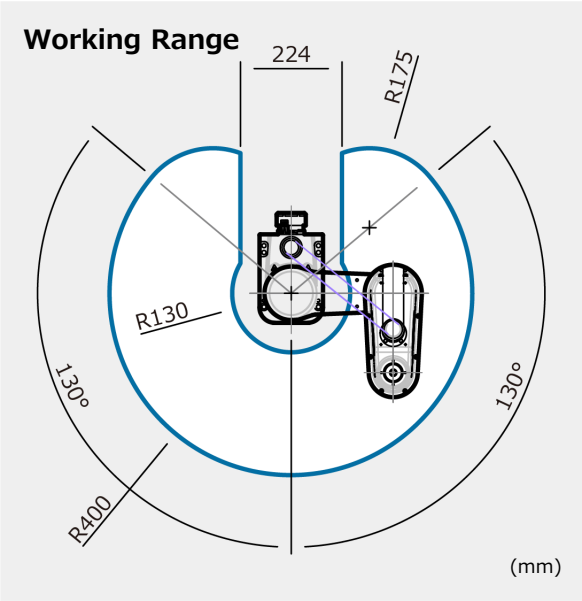

Up and Down Stroke : 160mm

Component Unit

Nutrunner Unit
(Handy 2000 Micro／Touch)

Robot Unit

Power Unit

Suction Unit

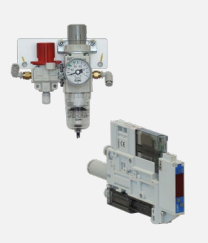

Vacuum Equipment

Parts Feeder

© ESTIC CORPORATION

Basic Configuration Robot Model THE600

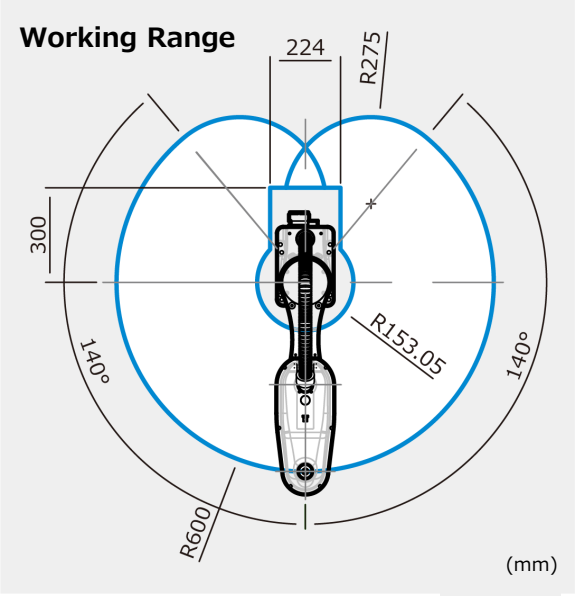

Up and Down Stroke : 210mm

Component Unit

Nutrunner Unit
(Handy 2000 Touch)

Robot Unit

Power Unit

Suction Unit

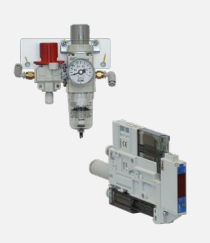

Vacuum Equipment

Parts Feeder

© ESTIC CORPORATION

Basic Configuration Robot Model THL900

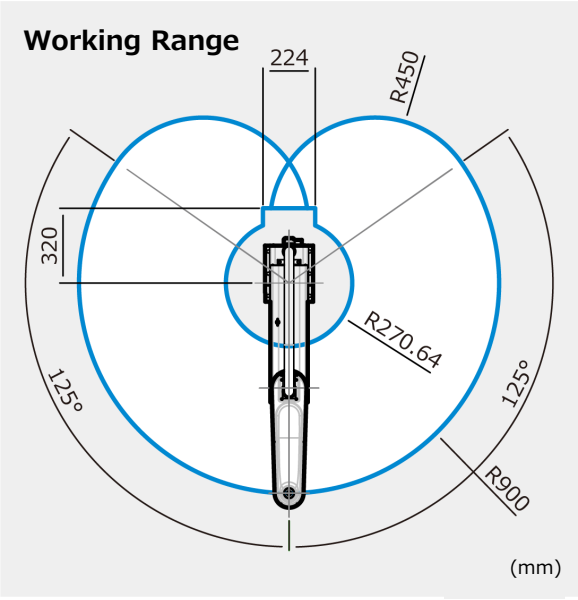

Up and Down Stroke : 300mm

Component Unit

Nutrunner Unit
(Handy 2000 Touch)

Robot Unit

Power Unit

Socket Unit

© ESTIC CORPORATION

Line-up

Image	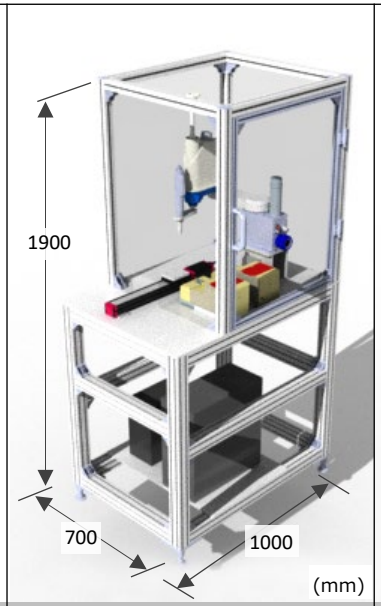	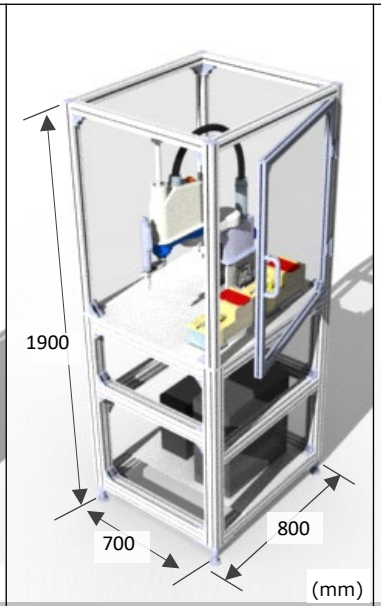	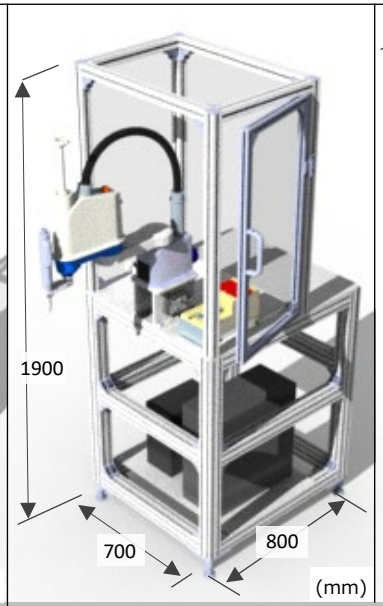	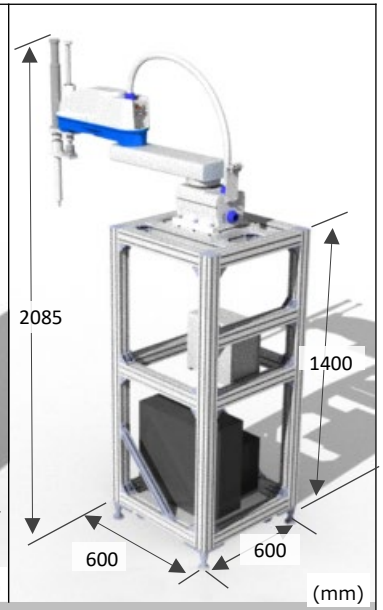
Title	**ERS-TypeA** With workpiece pull-in device	**ERS-TypeB** Without workpiece pull-in device	**ERS-TypeC** Conveyor compatible	
Applicable robot	THE400-EM01	THE400-EM01	THE400-EM01	THL900-EN01
Applicable handheld nutrunner	Handy 2000 Micro	Handy 2000 Micro	Handy 2000 Micro	Handy 2000 Touch
Screw capacity *1	M1.7~M6	M1.7~M6	M1.7~M6	M3~M12
Torque range (N·m)	0.1~5.0	0.1~5.0	0.1~5.0	1.0~100.0
Primary side power supply	Single-phase 200V AC±10% (50/60Hz)	Single-phase 200V AC±10% (50/60Hz)	Single-phase 200V AC±10% (50/60Hz)	Single-phase 200V AC±10% (50/60Hz)
Primary air supply	0.4MPa or higher	0.4MPa or higher	0.4MPa or higher	—

*1 Excludes truss head screw

© ESTIC CORPORATION

Specification

○ ：Applicable　　— ：Not applicable

	Title	ERS-TypeA	ERS-TypeB	ERS-TypeC	
Specification Contents	Applicable Robot	THE400-EM01	THE400-EM01	THE400-EM01	THL900-EN01
	Robot stand	✓	✓	✓	✓
	Casters (4 wheels)	✓	✓	✓	✓
	Adjuster	✓	✓	✓	✓
	Anchor bracket	✓	✓	✓	✓
	Anchor bolt	✓	✓	✓	✓
	Handheld nutrunner controller	Handy 2000 Micro／Touch	Handy 2000 Micro／Touch	Handy 2000 Micro／Touch	Handy 2000 Touch
	Handheld nutrunner tool unit	✓	✓	✓	✓
	Power unit	✓	✓	✓	✓
	SCARA robot	✓	✓	✓	✓
	Robot controller	✓	✓	✓	✓
	3 positions switch box	✓	✓	✓	N/A
	Applicable pallet size (jig)	200×200mm	350×250mm	350×250mm	850×450mm
	Workpiece jig	N/A	N/A	N/A	N/A
	Air supply	✓	✓	✓	N/A　*1
	Screw holding method	Air suction	Air suction	Air suction	Magnet　*2
	Parts feeder	✓(One machine)	✓(One machine)	✓(One machine)	N/A
	Workpiece pull-in	✓	N/A	N/A	N/A
	Workpiece pull-in method	Electric slider	N/A	N/A	N/A
	Area sensor	N/A	One surface (front)	N/A	N/A
	Safety cover (without electromagnetic lock)	4 sides	3 sides	4 sides	N/A
Option	Area sensor	○	Standard equipment (front only)	○	—
	Electronic door lock	○	○	○	—
	Adding parts feeder	○	○	○	—　*2
	Vision sensor	○ (Up to 4 units are possible)	○ (Up to 4 units are possible)	○ (Up to 4 units are possible)	—
	Signal tower	○	○	○	—
	Teaching pendant	○	○	○	○
	Management software	○	○	○	○
	Socket change function	—	—	—	○

*1　Pneumatic adsorption is possible. (However, it depends on the bolt size)　　*2　Custom-made is possible. Please contact our sales team.

© ESTIC CORPORATION

ESTIC

ESTIC CORPORATION

1-2-16 Togodori,
Moriguchi-city,Osaka,
570-0041 Japan

JP : www.estic.co.jp
EN : www.estic.co.jp/en/
CN : www.estic.co.jp/cn/

www.linkedin.com/company/estic-corporation

www.youtube.com/user/EsticCorporation

2512EN